FastClip™ Slide Clip w/ Anchor Hole (FCSC-HD)

14ga (68mils) 6" long vertical slide deflection clip

ClarkDietrich FCSC-HD is used to attach exterior curtainwall studs to the building concrete structure and provide for vertical building movement independent of the cold-formed steel framing.

Proprietary Deflection Screws are provided with each clip for attachment to the wall studs and allow for 3" vertical deflection (1-1/2" up and down) to ensure friction-free sliding. A 3/8" hole in the short leg of the clip allows for a 1/2" concrete anchor to be attached to the slab.

For allowable loads, reference the Clip & Connector Catalog or www.clarkdietrich.com/products/fastclip-slide-clip-fcsc-hd-w-anchor-holes for more information.

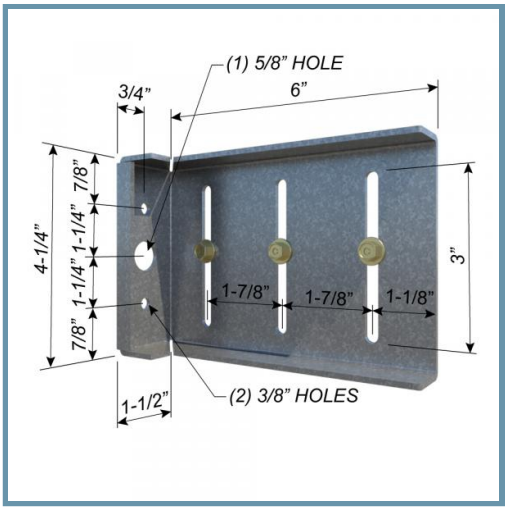

Product Data & Ordering Information:

Material	Structural Grade 50 Type H (ST50H), 50ksi (340MPa)
Dimensions	1-1/2" x 6" x 4-1/4" (38.1mm x 152.4mm x 101.6mm)
Thickness	14ga (68mils), 0.0713" Design thickness, 0.0677" Min. thickness
Coating	G90 (Z275) hot-dipped galvanized coating
Product weight	0.860 lb/piece
Packaging	25 pieces per bucket. Includes 80 Proprietary Deflection Screws per box.

Code Approvals & Performance Standards

- ASTM A653 Standard Specification for Steel Sheet, Zinc-Coated (Galvanized) or Zinc-Iron Alloy-Coated (Galvannealed) by the Hot-Dip Process
- ASTM A1003 Standard Specification for Steel Sheet, Carbon, Metallic- and Nonmetallic-Coated for Cold-Formed Framing Members
- SDS For ASTM A1003 Steel Framing Products For Interior Framing, Exterior Framing and Clips/Accessories

Sustainability Credits For more details and LEED letters contact Technical Services at 888-437-3244 or visit clarkdietrich.com/LEED.

- **LEED v4.1 MR Credit:** Environmental Product Declarations: EPD (1 point) - Sourcing of Raw Materials (up to 2 points) - Material Ingredients (1 point) - Construction and Demolition Waste Management (up to 2 points)
- **LEED v4 MR Credit:** Building Product Disclosure and Optimization: EPD (1 point) - Sourcing of Raw Materials (1 point) - Material Ingredients (1 point) - Construction and Demolition Waste Management (up to 2 points) - Innovation Credit (up to 2 points).

- Vertical movement up to 3" (1-1/2" up and 1-1/2" down).
- Proprietary Deflection Screws (included) provide frictionless slip connection.

Proprietary Deflection Screw