EasyClip™ S-Series™ (S977)

97mils (12ga) Support Clip

ClarkDietrich EasyClip S-Series support clips are commonly used for rigid connections in window and door framing, joist, bypass or other miscellaneous connections to secure one framing member to another, or to secure framing members to the structural frame. This high-performance, multi-use utility clip is ideal for corner reinforcements, stair openings, and numerous support applications. Available in a variety of lengths and gauges, EasyClip S-Series clips are prepunched for faster and more accurate fastener placement.

For allowable loads for multiple connection options, reference the Clip & Connector Catalog or www.clarkdietrich.com for more information.

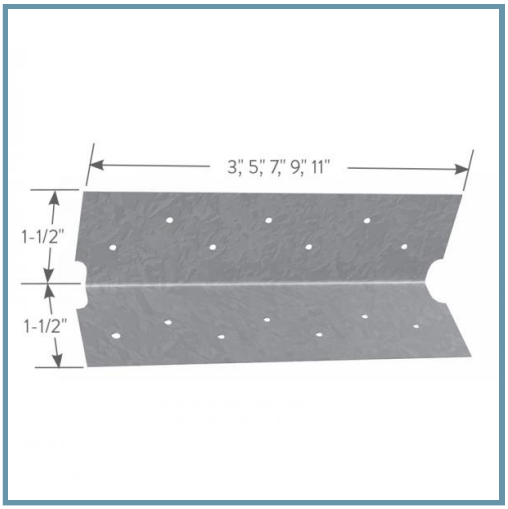

- 1-1/2" x 1-1/2" legs
- Available lengths: 3", 5", 7", 9" & 11"
- Available in 16, 14 & 12 gauge
- Pre-punched for faster and more accurate fastener attachment

Product Data & Ordering Information:

Material:	Structural Grade 50 Type H (ST50H), 50ksi (340 MPa)
Coating:	G90 (Z275) hot-dipped galvanized coating
Thickness:	97mils (12ga) 0.1017" Design thickness 0.0966" Minimum thickness
Dimensions:	1-1/2" x 1-1/2" x 7" (38.1mm x 38.1mm x 178mm)
Packaging:	100 pieces per bucket
Product Weight:	0.60 lb / piece

Code Approvals & Performance Standards

- ASTM A653 Standard Specification for Steel Sheet, Zinc-Coated (Galvanized) or Zinc-Iron Alloy-Coated (Galvannealed) by the Hot-Dip Process
- ASTM A1003 Standard Specification for Steel Sheet, Carbon, Metallic- and Nonmetallic-Coated for Cold-Formed Framing Members
- SDS For ASTM A1003 Steel Framing Products For Interior Framing, Exterior Framing and Clips/Accessories

Alternative Products:

- SwiftClip™ LS-Series Clip
- EasyClip™ U-Series™ Clip Angle
- EasyClip™ X-Series™ Clip Angle
- EasyClip™ D-Series™ Anchor Clip

Sustainability Credits For more details and LEED letters contact Technical Services at 888-437-3244 or visit clarkdietrich.com/LEED.
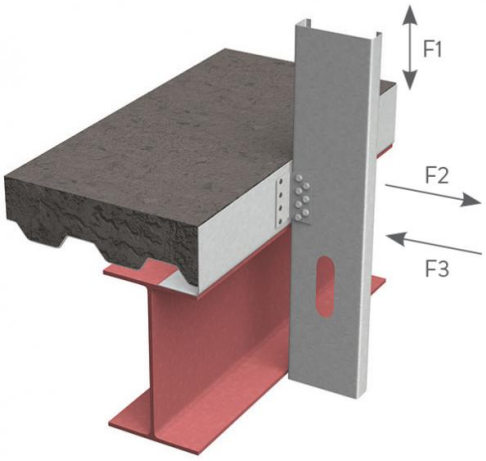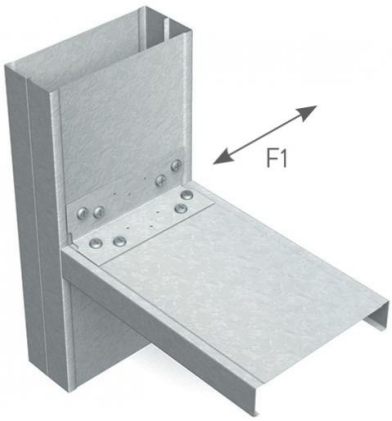
- **LEED v4.1 MR Credit:** Environmental Product Declarations: EPD (1 point) - Sourcing of Raw Materials (up to 2 points) - Material Ingredients (1 point) - Construction and Demolition Waste Management (up to 2 points)
- **LEED v4 MR Credit:** Building Product Disclosure and Optimization: EPD (1 point) - Sourcing of Raw Materials (1 point) - Material Ingredients (1 point) - Construction and Demolition Waste Management (up to 2 points) - Innovation Credit (up to 2 points).