3/4" U-Channel (CRC) 075U50-54

54mil (16ga) 33ksi

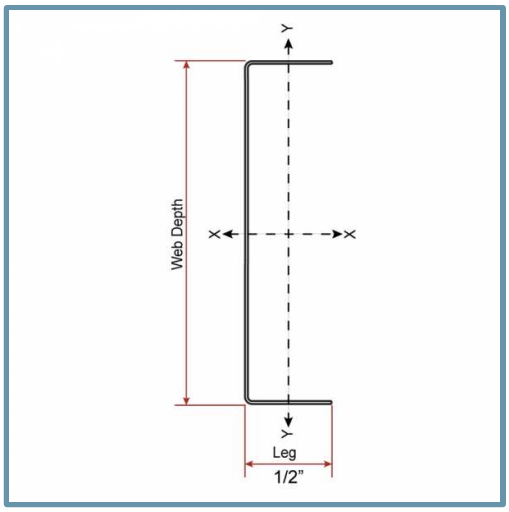

Used in framing applications:

- Furring for metal lath systems
- Drop down ceilings
- Lateral bracing in 2-1/2" Studs

Geometric Properties

Web Depth: 0.750 in
Leg Width: 0.500 in

Design Thickness: 0.0566 in
Min. steel thickness: 0.0538 in

Ultimate, Fu: 45 ksi
Yield stress, Fy: 33ksi
*Fy with Cold-Work, Fya 39.4 ksi

Gross Section Properties of Full Section, Strong Axis	
Cross sectional area (A)	0.087 in^2
Member weight per foot of length	0.296 lb/ft
Moment of inertia (Ix)	0.007 in^4
Radius of gyration (Rx)	0.289 in
Gross moment of inertia (Iy)	0.002 in^4
Gross radius of gyration(Ry)	0.156 in
Effective Section Properties, Strong Axis	
Moment of inertia for deflection (Ix)	0.007 in^4
Section modulus (Sx)	0.007 in^4
Section modulus (Sx)	0.019 in^3
Allowable bending moment (Ma)	0.459 in-k
Allowable shear force (Va)	315 lb

Product Data & Ordering Information:

Coating: G40, CP60 or G90
Color coding: Green
Stock length: 10'-0" long pieces (Custom length available by special orders)
Packaging: 10 pieces per bundle - 240 pieces per pallet
Packaging weight: 30 lbs/bundle

Code Approvals & Performance Standards

- AISI S100-16 (2020) w/S2-20 North American Specification for the Design of Cold-Formed Steel Structural Members
- AISI S240-20 North American Standard for Cold-Formed Steel Structural Framing
  - (Compliant to ASTM C955 , but IBC replaced with AISI S200 in IBC 2015, AISI S240 in IBC 2018)
  - Section A3 Material - Chemical & mechanical requirements (Referencing ASTM A1003/A1003M)
  - Section A4 Corrosion Protection (Referencing ASTM A653/A653M)
  - Section C Installation - (Referencing ASTM C1007)
- SDS For ASTM A1003 Steel Framing Products For Interior Framing, Exterior Framing and Clips/Accessories

Sustainability Credits For more details and LEED letters contact Technical Services at 888-437-3244 or visit clarkdietrich.com/LEED.

- **LEED v4.1 MR Credit:** Environmental Product Declarations: EPD (1 point) - Sourcing of Raw Materials (up to 2 points) - Material Ingredients (1 point) - Construction and Demolition Waste Management (up to 2 points)
- **LEED v4 MR Credit:** Building Product Disclosure and Optimization: EPD (1 point) - Sourcing of Raw Materials (1 point) - Material Ingredients (1 point) - Construction and Demolition Waste Management (up to 2 points) - Innovation Credit (up to 2 points).

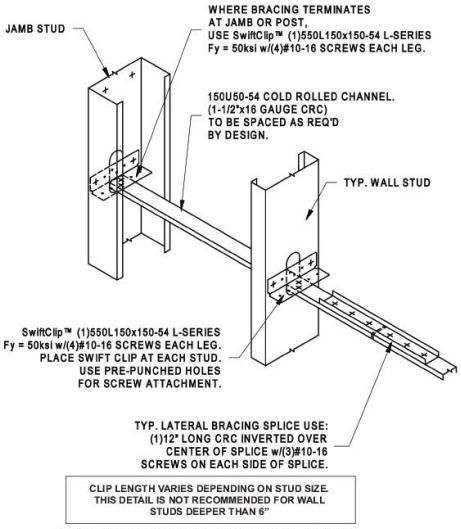

TYPICAL LATERAL BRACING DETAIL
USING COLD-ROLLED-CHANNEL (CRC)

For more ClarkDietrich CAD details see:
cad.clarkdietrich.com