Panel Lift Clip 12" (PLC12-97)

12 Gauge 12" lift clip

ClarkDietrich's Panel Lift Clip (PLC) is load rated and is used to safely lift wall panels at assembly warehouses or on a job-site. The clip comes pre-punched for screw attachment to the panel as well as a larger hole for the clamp. The rounded design of the top of the panel clip allows for the clamp to slide freely without getting stuck on the corners.

For allowable loads and multiple connection options, reference the Clip & Connector Catalog or www.clarkdietrich.com/products/panel-lift-clip-plc for more information

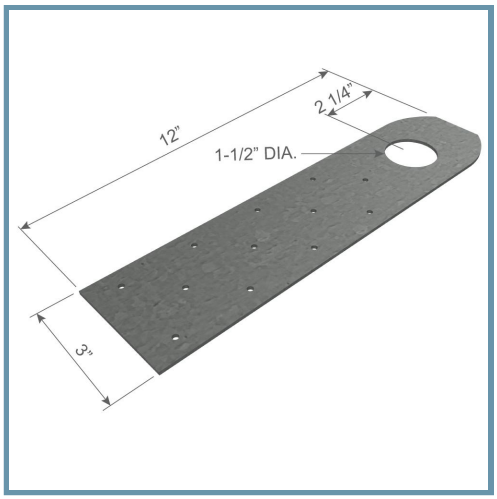

- Provides lift points
- Also available in a 8" length
- Panel Lift Clip is for single use only, and cannot be reused or reattached.

Product Data

Material:	Mill-certified SS Grade 50ksi (340MPa)
Dimensions:	3" x 12" (304.8mm x 41.3mm)
Thickness:	12ga (97mil), 0.1017" Design thickness, 0.0966" Min thickness
Coating:	G90 (Z275) hot-dipped galvanized coating
Product weight:	1.01 lb/piece
Packaging:	50 Per Bucket

Code Approvals & Performance Standards

- ASTM A653 Standard Specification for Steel Sheet, Zinc-Coated (Galvanized) or Zinc-Iron Alloy-Coated (Galvannealed) by the Hot-Dip Process
- ASTM A1003 Standard Specification for Steel Sheet, Carbon, Metallic- and Nonmetallic-Coated for Cold-Formed Framing Members
- SDS For ASTM A1003 Steel Framing Products For Interior Framing, Exterior Framing and Clips/Accessories