362TLD125-30 (33ksi, G40)

3-5/8" (TLD) TRAKLOC Deflection Stud with 1-1/4" flange - 30 mils (20ga DW)

Coating: G40 **Color Code:** Pink

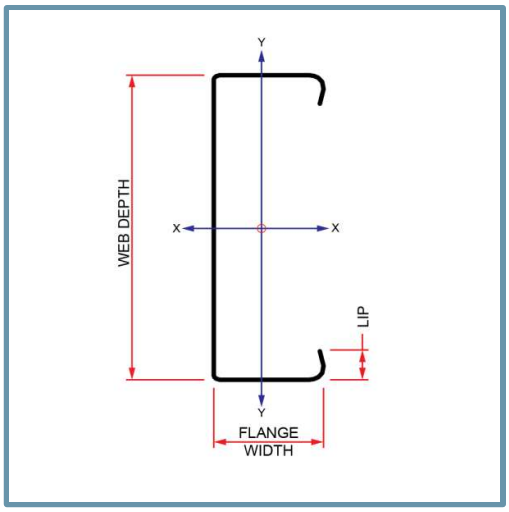

Geometric Properties

Web depth: 3.625 in	**Thickness:** 30 mils (20ga DW)	**Punchout width:** 1.500 in
Flange width: 1.250 in	**Design Thickness:** 0.0312 in	**Punchout width:** 4.000 in
Stiffening lip: 0.288 in	**Min. steel thickness:** 0.0296 in	**Yield strength, Fy:** 33 ksi

Gross Section Properties of Full Section, Strong Axis	
Cross sectional area (A)	0.202 in^2
Member weight per foot of length	0.689 lb/ft
Moment of inertia (Ix)	0.404 in^4
Radius of gyration (Rx)	1.413 in
Gross moment of inertia (Iy)	0.040 in^4
Gross radius of gyration (Ry)	0.445 in
Effective Section Properties, Strong Axis	
Effective Area (Ae)	0.114 in^2
Moment of inertia for deflection (Ixe)	0.401 in^4
Section modulus (Sxe)	0.179 in^3
Allowable bending moment - Loacal buckling (Mal)	3531 in-lbs
Allowable bending moment - Distortional buckling (Mad)	3822 in-lbs
Allowable shear force in web (Unpunched)(Vag)	785 lb
Allowable shear force in web (Punched)(Vanet)	453 lb
Torsional Properties	
St. Venant torsional constant (J x 1000)	0.0657 in^4
Warping constant (Cw)	0.108 in^6
Distance from shear center to neutral axis (Xo)	-0.859 in
Radii of gyration (Ro)	1.712 in
Torsional flexural constant (Beta)	0.748
Stud/Track end reaction (Rx)	134 lbs
Unbraced Length (Lu)	30.8 in

- Calculated properties are based on AISI S100-07 w/ S2-10 Supplement and AISI S100-12, North American Specification for Design of Cold-Formed Steel Structural Members.
- Gross and torsional properties are based on full-unreduced cross section of the studs, away from punch-outs.
- The allowable moment based on local buckling (Mal) is based on the compression flange continuously braced.
- The distortional buckling moment (Mad) does not consider the beneficial effect of sheathing to rotational stiffness.
- For deflection calculations, use the effective moment of inertia.
- Stud/Track End Reaction (Rx) is the maximum end reaction (web crippling) capacity based on a minimum bearing length of 1 inch.
- East Coast Punch Pattern: Center of knockouts are 12" from the leading edge then 48" o.c.
- West Coast Punch Pattern: Center of knockouts are 24" from the leading edge then 24" o.c.

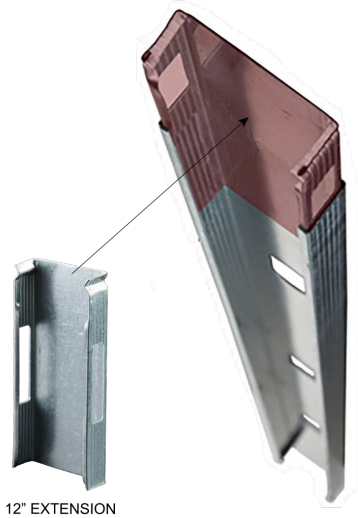

12" EXTENSION INSERT WITH FLANGE SLOTS

Code Approvals & Performance Standards

- AISI S100-12 North American Specification for the Design of Cold-Formed Steel Framing Structural Members
- AISI S220-11 North American Standard for Cold-Formed Steel Framing - Nonstructural Members
  - (Compliant to ASTM C645 , but IBC replaced with AISI S220 in IBC 2015)
  - Section A4 Material - Chemical & mechanical requirements (Referencing ASTM A1003/A1003M)
  - Section A5 Corrosion Protection (Referencing ASTM A653/A653M)
  - Section C Installation - (Referencing ASTM C754)
- ICC-ES ESR-1464 TRAKLOC
- SDS For ASTM A1003 Steel Framing Products For Interior Framing, Exterior Framing and Clips/Accessories

Sustainability Credits For more details and LEED letters contact Technical Services at 888-437-3244 or visit clarkdietrich.com/LEED.

- **LEED v4.1 MR Credit:** Environmental Product Declarations: EPD (1 point) - Sourcing of Raw Materials (up to 2 points) - Material Ingredients (1 point) - Construction and Demolition Waste Management (up to 2 points)
- **LEED v4 MR Credit:** Building Product Disclosure and Optimization: EPD (1 point) - Sourcing of Raw Materials (1 point) - Material Ingredients (1 point) - Construction and Demolition Waste Management (up to 2 points) - Innovation Credit (up to 2 points).

3-5/8" (TLD) TRAKLOC Stud 30 mils (20ga DW) - FULL COMPOSITE Limiting Heights (AC86-2012)

With 1-3/8" leg TRAKLOC Track + (1 layer) 5/8" Type X Gypsum Board each side

Spacing (inches)	5 psf			7.5 psf			10 psf		
	L/120	L/240	L/360	L/120	L/240	L/360	L/120	L/240	L/360
12	24'-7"	20'-2"	17'-10"	21'-6"	17'-8"	15'-7"	19'-6"	16'-0"	14'-2"
16	22'-8"	18'-8"	16'-6"	19'-10"	16'-4"	14'-5"	18'-0"	14'-10"	13'-1"
24	20'-1"	16'-7"	14'-7"	17'-7"	14'-6"	12'-9"	16'-0"	13'-2"	11'-7"

- Allowable composite limiting heights were determined in accordance with ICC-ES AC86-2012.
- Additional composite wall testing and analysis requirements of the SFIA Code Compliance Certification Program were observed.
- In accordance with current building codes and AISI design standards, the 1/3 Stress Increase for strength was not used.
- The composite limiting heights provided in the tables are based on a single layer of 5/8" Type X Gypsum Board complying with ASTM C1396 and from the following manufacturers: American Gypsum, CertainTeed, Georgia Pacific, Continental, National Gypsum or USG.
- The gypsum board must be applied full height in the vertical orientation to each stud flange and installed in accordance with ASTM C754 using minimum No. 6 Type S fine thread Drywall bugle head screws spaced as listed below:
  - Screws spaced a maximum of 16 inch on-center to framing members spaced at 12 inch on-center.
  - Screws spaced a maximum of 12 inch on-center to framing members spaced at 16 inch or 24 inch on-center.
  - Screws spaced 16 inch on-center to the bottom track only.
- No fasteners are required for attaching the stud to the track except as detailed in ASTM C754.
- Stud end bearing must be a minimum of 1 inch.
- The minimum overlap of the TSO (Outer Stud) and TSE (Inner Stud) must be 8 inches and the maximum un-lapped length of the TSE must be 4 inches.

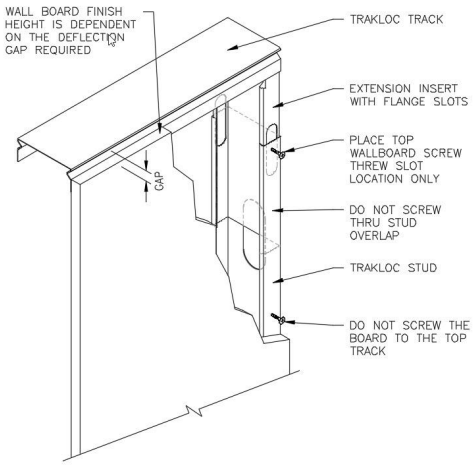

f Adjacent to the height value indicates that flexural stress controls the allowable wall height.
s Adjacent to the height value indicates that shear/end reaction controls the allowable wall height.

3-5/8" (TLD) TRAKLOC Stud 30 mils (20ga DW) - NON-COMPOSITE Limiting Heights (FULLY BRACED)

Spacing (inches)	5 psf			7.5 psf			10 psf		
	L/120	L/240	L/360	L/120	L/240	L/360	L/120	L/240	L/360
12	21'-8"	17'-5"	15'-2"	17'-9"	17'-1"	14'-11"	15'-4"	15'-4"	13'-7"
16	18'-10"	15'-10"	13'-10"	15'-4"	15'-4"	13'-7"	13'-3"	13'-3"	12'-4"
24	15'-4"	13'-10"	12'-1"	12'-6"	12'-6"	11'-10"	10'-10"	10'-10"	10'-9"

- Heights are based on AISI S100-07 w/S2-10 Supplement, and AISI S100-12 Specification using steel properties alone.
- Compression flange must be continuously braced.
- End bearing must be 1 inch.
- The minimum overlap of the TSO (Outer Stud) and TSE (Inner Stud) must be 8 inches and the maximum un-lapped length of the TSE must be 4 inches.

e Web stiffeners are required at the stud/track connection.

3-5/8" (TLD) TRAKLOC Stud 30 mils (20ga DW) - NON-COMPOSITE Limiting Heights (BRACED at 48" o.c.)

Spacing (inches)	5 psf			7.5 psf			10 psf		
	L/120	L/240	L/360	L/120	L/240	L/360	L/120	L/240	L/360
12	19'-11"	17'-5"	15'-2"	16'-3"	16'-3"	14'-11"	14'-1"	14'-1"	13'-7"
16	17'-3"	15'-10"	13'-10"	14'-1"	14'-1"	13'-7"	12'-3"	12'-3"	12'-3"
24	14'-1"	13'-10"	12'-1"	11'-6"	11'-6"	11'-6"	10'-0"	10'-0"	10'-0"

- Heights are based on AISI S100-07 w/S2-10 Supplement, and AISI S100-12 Specification using steel properties alone.
- Above listed Non-Composite Limiting Heights are applicable when the unbraced length is less than or equal to (Lu) as listed in section properties.
- End bearing must be 1 inch.
- The minimum overlap of the TSO (Outer Stud) and TSE (Inner Stud) must be 8 inches and the maximum un-lapped length of the TSE must be 4 inches.

e Web stiffeners are required at the stud/track connection.