EasyClip™ U-Series™ (U979)

97mils (12ga) Clip Angle

ClarkDietrich EasyClip U-Series clip angles are used to secure U-channel to wall studs for lateral bridging or for miscellaneous rigid connections. U-channel is passed through the stud knockout and an EasyClip U-Series clip is screw-attached or welded to provide a rigid connection. Available in a variety of lengths and gauges, EasyClip U-Series clips are prepunched for faster and more accurate fastener placement. U-Series clip angles and U-channel should not be used in bridging applications when the stud width exceeds 8".

For typical construction details using this clip, reference the Clip & Connector Catalog or www.clarkdietrich.com for more information.

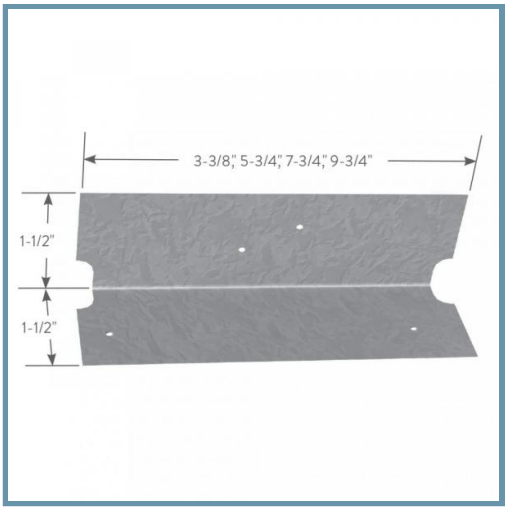

- 1-1/2" x 1-1/2" legs
- Available lengths: 3-3/8", 5-3/4", 7-3/4" & 9-3/4"
- Available in 16, 14 & 12 gauge
- Pre-punched for faster and more accurate fastener attachment

Product Data & Ordering Information:

Material:	Structural Grade 50 Type H (ST50H), 50ksi (340 MPa)
Coating:	G90 (Z275) hot-dipped galvanized coating
Thickness:	97mils (12ga) 0.1017" Design thickness 0.0966" Minimum thickness
Dimensions:	1-1/2" x 1-1/2" x 9-3/4" (38.1mm x 38.1mm x 248mm)
Packaging:	80 pieces per bucket
Product Weight:	0.83 lb / piece

Code Approvals & Performance Standards

- ASTM A653 Standard Specification for Steel Sheet, Zinc-Coated (Galvanized) or Zinc-Iron Alloy-Coated (Galvannealed) by the Hot-Dip Process
- ASTM A1003 Standard Specification for Steel Sheet, Carbon, Metallic- and Nonmetallic-Coated for Cold-Formed Framing Members
- SDS For ASTM A1003 Steel Framing Products For Interior Framing, Exterior Framing and Clips/Accessories

Alternative Products:

- FastBridge™ Clip
- SwiftClip™ LS-Series Clip
- EasyClip™ X-Series Clip Angle
- Spazzer® 5400 and Spazzer® 9200

Sustainability Credits For more details and LEED letters contact Technical Services at 888-437-3244 or visit clarkdietrich.com/LEED.

- **LEED v4.1 MR Credit:** Environmental Product Declarations: EPD (1 point) - Sourcing of Raw Materials (up to 2 points) - Material Ingredients (1 point) - Construction and Demolition Waste Management (up to 2 points)
- **LEED v4 MR Credit:** Building Product Disclosure and Optimization: EPD (1 point) - Sourcing of Raw Materials (1 point) - Material Ingredients (1 point) - Construction and Demolition Waste Management (up to 2 points) - Innovation Credit (up to 2 points).